BILL OF MATERIALS (RECLAIMED CONTROL PANEL)

(ALL ELECTRICAL COMPONENTS AND ASSEMBLIES MUST BE UL LISTED/APPROVED)

ITEM	NAME	DESCRIPTION	MANUFACTURER	TYPE
1	Control Panel	24"x24"x12" NEMA 4X 304 SS, panel painted white with 3-point latch and SS lockable handle	Hoffman or appr. equal	A24H2412SSLP3PTW see specification.
2	PLC	MICROLOGIX 1400 (24VDC) w/ memory module	Allen-Bradley	1766-L32BXB w/ memory module
3	Expansion Module	Analog expansion module	Allen-Bradley	1769-IF4
4	Radio	5 Watt Ethernet/Serial Radio	MDS	SD4CES-NNSNN
5	Antenna Cable	Low loss coaxial cable	Andrews Heliax	LDF4-50A
6	RF Coaxial Connector	Antenna cable connector	Andrews	L4TNM-PSA or L4TNF-PSA
7	RF Surge Suppressor	RF Lighting Surge Arrester	Polyphaser	IS-50NX-C2
8	Yagi Antenna	UHF 450MHz - 470MHz	Sinclair	SY-307
9	120V Main Circuit Breaker	Thermal Magnetic	Square D	Type QOU, 15A
10	120V TVSS	Din-rail mount TVSS	Atlantic Scientific	MA15
11	240V TVSS	Surge Current 80KA per phase	Square D	HEPD
12	Power Supply	120VAC to 12VDC power supply unit	Allen-Bradley	1606-XLP50B
13	Power Converter	12VDC TO 24VDC Converter	Rhino Converter Concepts Majorpower.com	PSP24-DC12-1 VT25-182-10/XX 12-24VDC majorVTC1201 12-24VDC
14	Terminal block	Copper Tin Plated Double Deck 600V Box Lug	Square D Phoenix	Class 9080 UTTB4- 3044814
15	Ground Terminal	Copper Tin Plated, Ground Bar End Clamp, 20 Pole Bridge 2 Pole Bridge	Square D Phoenix	Class 9080, 1130-PK9GTA CLIPFIX, FBS 20-6 3030365, FBS 2-6 3030365
16	Battery	12V, 18AH battery (for 120VAC) 12V, 55AH battery (for solar powered panel), sealed type	Power sonic TOYO-USP	P12180 6GFM55
17	Level Transmitter	Submersible Range: 0 - 5 feet w/ desiccant	Ametek Drexelbrook Blue Ribbon Birdcage MEAS	SDT-M-B-0006 BC001-10-X KPSI 720-S14B0A (cable length as necessary)
18	Pressure Transmitter	System Pressure (NEMA 4X) 0-150 psig	Endress+Hauser	Cerabar T (PMC131-A22F1Q4R)
19	Flow Transmitter	Insertion Type, 4-20mA output Vary with pipe size	CLA-VAL	X144-e (cable length as necessary)
20	Control Relay	DPDP, 3PDT 8 Pin Base 24 volt	Potter Brumfield Allen Bradley	KRPA-11DG-24 700-HA33ZZ4-3-4
21	Low voltage Surge	Dual Signal Surge Arrester	EDCO	PC642C-036-X
22	Cat. 5e Cable	Ethernet Cable with connectors (8 Pin Mini Din to 9 Pin)	Allen-Bradley	4PRS, STP 26AWG
23	120VAC Relay	3PDT 11 Pin, Round Base 120VAC	Allen Bradley	700-HA33A1-3-4
24	Antenna Tower	Tower Top Section w/ short base	Rohn	45AG2 w/ SB45G
25	Circuit Breaker	Amp and number of poles vary	Square D	Class 860 Multi 9 C60
26	Load Center	120/240V, 1-Phase, 125A rated, Service Entrance rated load center w/ 50A Main Breaker, 12 spaces NEMA 3R (min. 22 kAIC)	Square D	QO112L125GRB w/ QOM50VH
27	Solar Panel	Solar Photovoltaic Module 110W	Sunwize Solartech	SW-S110P-D4 SPM110P-FSW
28	Solar Controller	Solar Controller (12V)	Morningstar	Sunsaver SS-20L-12V
29	Power Supply for Solenoid	120VAC to 24VDC (only required at lift sta. & reclaim combined panel)	Allen-Bradley	1606-XLP30E
30	Terminal J-Box	NEMA 4X, 316 S.S. w/ control terminals	Hoffman	A1212CHNFSS6

RECLAIMED WATER SYSTEM RTU CONTROL PANEL

32R

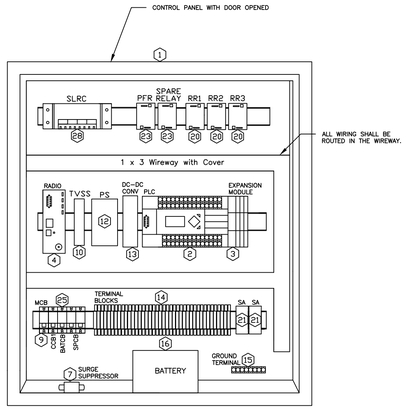

FRONT VIEW
NOT TO SCALE

NOTES:

1. SEE BILL OF MATERIALS PAGE NO. 31R.
2. ALL FIELD WIRING SHALL BE CONNECTED TO THE TERMINALS.
3. BATTERY SHALL BE LOCATED ON THE BOTTOM OF THE CONTROL PANEL, AWAY FROM ANY HEAT SOURCE.
4. PANEL BUILDER SHALL ADJUST THE PANEL LAYOUT AS NEEDED.

RECLAIMED WATER SYSTEM RTU CONTROL PANEL

33R

A. Panel Builder

1. The panel builder shall be experienced in the construction of control panels/RTU's, shall have a UL approved shop. Panel shall be UL listed and UL labeled.
2. The panel builder shall warrant the panel for one (1) full year minimum from the date of final project certification.
3. The panel builder or qualified technical representative shall check-out and test the panel as part of the reclaimed RTU system start-up.

B. Panel Components

1. The panel components are specified on the drawings with the exception of items described in these specifications. Items are listed by manufacturer and catalog number, other equal quality components may be substituted but they must be preapproved by Utility Department, be UL listed, and be fully interchangeable with those specified in size, function, mounting dimensions, plug in connections, and ampacity. Any substitutions or changes must be approved in advance and in writing by the Utility Department. All components shall be new, with no signs or evidence of corrosion.

C. RTU Enclosure

1. The RTU panel itself shall be 24 inch wide x 24 inch high x 12 inch deep (24"W x 24"H x 12"D). A shop drawing must be submitted prior to preconstruction meeting. The panel shall be of a NEMA 4X construction with the following features:
   a. Constructed of 304 stainless steel 14 gauge with white powder coated. All seams to be continuously welded, spot welded panels will not be accepted.
   b. All external hardware shall be stainless steel with piano hinge, 3-point latch with roller fitting top and bottom and single handle with padlock fitting and stainless steel external parts.
   c. Full length welded drip shield to deflect water from the door, a continuous closed cell neoprene gasket on the door.
   d. Aluminum back mounting plate for heavy components (min. .090 thickness).
   e. The outer door is to have nine inch by eleven inch (9" x 11") stainless steel or aluminum pocket for log book, tack weld to door.
   f. No penetration through the panel will be allowed except for conduits. i.e. no screws through panel, frame, no top penetration.
2. The enclosure shall be the product of a UL approved manufacturer and shall be a NEMA-4X enclosure. Manufacturer shall be Hoffman or approved equal. Enclosure shall have lugs for mounting.

D. Wiring

1. All wiring shall be copper THWN or approved equal, AWG 14 minimum. Color code wires as follows:

Ground	-	Green
Neutral	-	White
120 Volt Power	-	Black
24 Volt Control	-	Violet
Analog Signal	-	Black and White
Special	-	Blue

   Different control wiring colors are acceptable if clearly identified. Power wiring shall be kept separate from control wiring, and shall be identified by phase.
2. All wires shall be numbered with machine made plastic wrap around labels at both ends.
3. All external connection and internal connections, where shown on the drawings, shall be brought to the numbered terminals.
4. Wiring shall be enclosed in panduct or equivalent wireways and wiring between the doors and the panel shall be enclosed in a spiral wrap or approved equal with sufficient slack to allow full opening of the door.
5. Wiring shall be secured with screw-on tabs, tabs with adhesives shall not be used.
6. All wiring shall be front accessible.
7. All electrical wiring must meet or exceed National Electric Code and Local Code Standards.
8. Any place that electrical wire passes through a metal cover or shield, insulating grommet is required to protect the wire.

E. Component Mounting

1. All components shall be securely mounted with stainless steel hardware. Self tapping screws are not acceptable.
2. All relay bases shall be front mounted with screw terminals, no soldered connections shall be used. All base terminals shall be numbered to correspond to relay numbers. Where plug-in components are not firmly secured in bases, hold down clamps shall be provided.

F. Identification

1. All components shall be identified in accordance with the schematic diagram, using permanent name tags on the panel of laminated micarta or approved equal. The permanent name tags shall be securely attached and in a position where they are clearly visible.
2. All operator's controls shall be provided with laminated micarta name tags attached with stainless steel screws, with minimum lettering height of 1/8 inch.
3. Provide a laminated schematic drawing attached to the inside of the outer door - minimum size 11 inches by 17 inches (11" x 17").

G. Drawings

1. Panel builder shall provide the following drawings:
   a. Schematic drawing showing all components. Components shall be properly identified by number and function. All connections shall be numbered to correspond to the component numbers. All wires and terminals shall be clearly numbered and identified.
   b. Bill of material listing all parts as follows, in tabular form:
      1) Drawing Reference
      2) Description
      3) Manufacturer
      4) Catalog Number
      5) Type
      6) Notes
   c. Layout drawing showing the front with the operators panel and with the panel open. Layout drawings shall also show the outside dimensions of the panels and dimensioned mounting supports.
   d. Plastic encased drawing inside the panel as previously noted herein.
2. Drawings shall be clear and readable and a minimum of 11 inches by 17 inches (11" x 17"). "Fuzzy" reductions will be rejected.

H. See Remote Telemetry Units (RTU specifications) for programmable logic controller (PLC), I/O expansion module, Radio, solar power system, etc. requirements.

RECLAIMED WATER SYSTEM RTU PANEL SPECIFICATIONS

34-35R

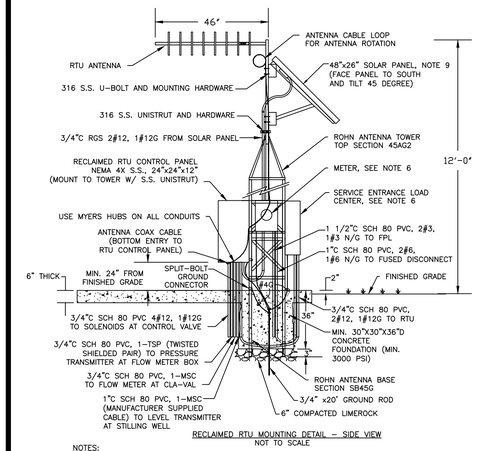

RECLAIMED RTU MOUNTING DETAIL - SIDE VIEW
NOT TO SCALE

NOTES:

1. MAST AND METAL STRUCTURE SHALL BE GROUNDED IN ACCORDANCE WITH NEC SECTION 810-21.
2. ANTENNA INSTALLATION SHALL MEET THE WIND LOADING REQUIREMENT PER FLORIDA BUILDING CODE.
3. MINIMUM ANTENNA HEIGHT SHALL BE 12 FEET. IF ANY OBSTRUCTION IS LOCATED BETWEEN THE RADIO COMMUNICATION PATH, ANTENNA HEIGHT SHALL BE HIGHER THAN THOSE OBSTRUCTIONS.
4. CONDUITS SHALL NOT ENTER THE TOP OF CONTROL PANEL.
5. ALL ELECTRICAL PANELS SHALL BE GROUNDED.
6. METER AND SERVICE ENTRANCE RATED LOAD CENTER ARE NOT REQUIRED IF THE RTU IS SUPPLIED BY SOLAR POWER OR NEARBY LIFT STATION POWER.
7. ALL MOUNTING HARDWARE SHALL BE 316 STAINLESS STEEL.
8. MAINTAIN 36" CLEARANCE IN FRONT OF ALL ELECTRICAL PANELS.
9. SOLAR PANEL IS NOT REQUIRED IF 120 VAC POWER IS AVAILABLE.
10. ELECTRICAL PANEL SUPPORT STRUCTURE / ANTENNA TOWER HAS BEEN DESIGNED IN ACCORDANCE WITH THE FLORIDA BUILDING CODE 2010 FOR THE FOLLOWING CRITERIA:
    * RISK CATEGORY IV
    * EXPOSURE CATEGORY "C"
    * WIND VELOCITY, Vult = 181 MPH

RECLAIMED WATER SYSTEM
RTU ANTENNA AND PANEL MOUNTING DETAIL

41R

1. REMOTE TELEMETRY UNITS AND APPURTENANCES (R.T.U.)

A. The Remote Telemetry Units shall be microprocessor based, user programmable, Programmable Logic Controllers (PLC's) which shall serve as an interface to accumulate, process, transmit and receive discrete and analog status and control messages between the RTU base stations and the remote RTU sites located within a ten mile radius of the base station.

B. Each RTU shall be PLC based, with sufficient battery backed RAM, or EEPROM non-volatile backup memories to provide all discrete and analog status, monitoring and control functions and shall be designed to operate in an outdoor industrial environment.

C. The programmable controller shall be designed to operate in an industrial environment. The PLC shall be capable of operation in an ambient temperature range of 0°-60°C and a relative humidity of 5-95 percent, non-condensing. The PLC shall be capable of operation on supply voltages of 24VDC.

D. All components of the PLC system shall be of the same manufacturer who is regularly engaged in the manufacture of programmable controllers. The manufacturer shall have fully tested units similar to that being furnished in an industrial environment with associated electrical noise. The processing unit shall perform the operations functionally described herein based on the program stored in memory and the status of the inputs and outputs.

E. The processor and its associated memory shall be enclosed in a modular sheet metal enclosure. Memory shall consist of battery-backed RAM, which shall retain the control program in the event of AC power loss. Memory shall be not less than 8K user logic for any PLC and shall be adequate for all control functions specified. A minimum of 1920 on-board registers shall be addressable.

F. The relay logic instructions of the programmable controller shall include normally open; normally closed; transitional positive and negative contacts; timers in .01, .1, and 1.0- second resolution; and up/down counters. Register and table instructions shall include block moves, table to register, register to table, FIFO, table search, and table to table. Register matrix operations shall include bit sense, bit set/clear, and, or, exclusive or, bit rotate, and complement.

G. LED-type indicating lights shall be provided as follows: READY, RUN.

H. Programmable controllers and accessory equipment shall be Allen Bradley MicroLogix 1400/1766-L32BXB, with memory module and analog extension module.

I. All RTUs shall be powered with either 120VAC through a power supply or 12VDC from solar controller capable of float charging sealed Gel-cell batteries. In a 120VAC powered panel, solar panel and solar controller are not required. For 120V, it shall include an AC power loss alarm output to the RTU on loss of AC power. Power supply shall be of sufficient capacity to provide all required DC power to all RTU equipment, discrete and analog input/output circuitry, under full load, communications interface equipment, PC modems, radios and other radio interface/conditioning equipment and appurtenances as required. The primary power supply for radio and battery backup shall be 12VDC. A 12V to 24V Converter is required for the PLC and I/O use. The batteries shall not be older than (3) months at the time of RTU acceptance and shall be lead acid sealed, 12 volt, 18 ampere-hour, model Power Sonic PS-12180. The battery charger/power supply shall be compatible with the battery, type 1606-XLP50B by Allen Bradley and set the output voltage at 13.6V. The 12V to 24V converter shall be model: PSP24-DC12-1 by Automation Direct or approved equal. In a Solar powered panel, provide a Solar Panel with all necessary components including a solar controller. Solar panel shall be mounted on the antenna pole with stainless steel U-bolts. The solar panel installation shall meet 150MPH wind loading requirements. Solar panel shall be 110 watts, 12V Sunwize SW-S110P-D4 or Solartech SPM110P-FSW with pole mount kit Sunwize 007954 or by DPW Solar. The solar controller shall be Morningstar Sunsaver SS-20L-12V. See wiring schematics.

J. Spare parts are not required.

K. All analog inputs shall be furnished with lightning surge protection devices. Sufficient I/O shall be provided for each RTU to accommodate the scheduled I/O .

1. Digital inputs shall be 24VDC from dry contacts.
2. All outputs shall be wired through interposing relays.
3. Analog input circuits shall be isolated, 15-bit resolution type. Analog inputs shall be coordinated with the receivers but shall generally be isolated 24V 4-20 mA inputs powered from the PLC. Analog input hardware shall be provided as required for all types of analog inputs being transmitted to the PLC.

L. The RTU hardware shall be assembled to a back plate mounted inside the RTU control panel. All components shall be mechanically secured and fully wired. A bonding wire #12 AWG with crimped end terminals is required between the back plate and control panel.

M. The summary of approved remote telemetry equipment/materials and manufacturers are listed in the Bill of Materials.

I/O List:

Power Loss Alarm (Spare in Solar)	digital input I/O (only for 120VAC panel)
Valve Open Command	digital output O/O
Valve Close Command	digital output O/1
Reclaimed Water Pressure	analog Input IV1 (extension module)
Lake Level	analog Input IV2 (extension module)
Reclaimed Water Flow	analog Input IV3 (extension module)

2. RTU COMMUNICATIONS INTERFACE

A. Bi-directional communications of status, commands and radio diagnostics between the RTUs and the RTU base station shall be provided by the RTU communications interface subsystem. The PLC MODBUS serial interface port shall serve as the RTU communications interface. The data transmission rate shall be set to operate at 9600 Baud (synchronous) in ASCII mode.

B. The RTU communications interface shall control the modem during the polling sequence. It shall be possible to assign a base address to each RTU through the data interface. The addressing scheme shall allow a minimum of 247 RTUs for each data link. The communications protocol shall be master-slave MODBUS ASCII for Central and South Towers, and be master-slave MODBUS RTU for North Tower.

3. RTU RADIO SECTION AND APPURTENANCES

A. The radio section shall consist of a Microwave Data Systems model MDS SD4CES-NNSNN 5-watt (continuous) Ethernet/Serial radio transceiver with integral RF modem, RS-232 synchronous serial interface and cable, private line coded squelch and carrier detect timer to inhibit communications backup. Radio transceiver shall include automatic frequency, control, loop-back and SMART diagnostics remote maintenance module to monitor; power out, RSSI, voltage level, internal temperature and forward/reflected power. Radio enclosure shall include RF shield. The interface cable from radio to RF surge suppressor shall be 24" long, RG142 cable with TNC (Threaded Neill-Concelman) and N. Male RF connectors.

B. Remote terminal unit antenna shall be a heavy-duty, pole-mounted, grounded, 450 MHz - 470MHz Yagi, directional type furnished with a minimum of 20 feet of Andrews Heliax (LDF4-50A) low loss coaxial antenna cable or approved equal, line adapter, lightning protector and appurtenances. Antenna and accessories shall be an SY-307 as manufactured by Sinclair or approved equal. Dual phase array Yagi antennae shall be required if the Remote Receive Signal Strength (RSSI) is less than 95 dbm. Minimum antenna height shall be 12 feet above grade, unless otherwise instructed by the Utility Department. Antenna tower shall be made of galvanized steel. RF lightning surge suppressor shall be IS-50NX-C2 by Polyphaser Corporation or approved equal. RF coaxial connectors shall be of the compression type and be a L4TNM-PSA or L4TNF-PSA by Andrews or approved equal. The antennae orientation toward the receiving communication tower shall be set using appropriate instruments.

C. The complete communications subsystem including all interconnecting cables shall contain lightning, surge and transient protection. All antennae masts shall be grounded.

D. Radios shall be pre-programmed by the factory for the frequency of the tower that the radio will be communicating with. See attached RTU Schedule for location of stations. Frequencies are as follows:

1. North Tower - Remote transmit-465.1500 MHz - Receive-460.1500 MHz
For stations located north of Lantana Rd., south of Roebuck Rd., and east of S.R. 7
2956 Pinehurst Dr., Greenacres, FL (Coordinates: 26°38.0177N, 80°09.352"W)

2. Central Tower - Remote transmit-465.750 MHz - Receive-460.750 MHz
For stations located south of Lantana Rd. and North of Clint Moore Rd.
12751 Hagen Ranch Rd., Delray Beach, FL (Coordinates: 26°29.260'N, 80°10.018'W)

3. South Tower - Remote transmit-465.025 MHz - Receive-460.025 MHz
For stations located south of Clint Moore Rd.
22438 S.W. 7th Street, Boca Raton, FL (Coordinates: 26°20.586'N, 80°11.840'W)

4. West Tower - Remote transmit-465.525 MHz - Receive-460.525 MHz
For stations located north of S.R. 80 and west of S.R. 7; plus all stations located north of Roebuck Rd.
20 S.R. 880, Loxahatchee, FL (Coordinates: 26°41.05'N, 80°23.37'W)

4. RTU ELECTRICAL TRANSIENT PROTECTION

A. All electrical and electronic elements shall be protected against damage due to electrical transient induced in interconnecting lines from lightning discharges and nearby electrical systems.

B. Manufacturer's Requirements: All surge suppressor devices shall be manufactured by a company that has been engaged in the design, development, and manufacture of such devices for at least 5 years.

C. Suppressor Locations: As a minimum, provide surge suppressors at the following locations:

1. At main breaker of the RTU control panel for 120VAC power panel.
2. At the field, panel, or assembly connections of all analog signal circuits that have any portion of the circuit extending outside of a protecting building.
3. Between the radio and external mounted antenna.

D. Surge Suppressor Assemblies for 120-Volt AC Power Supply Connectors: Surge suppressors for connections to ac power supply circuits shall be assemblies that:

1. Pluggable, Din-rail mounting AC power protection.
2. Power on and protection status indicator.
3. Hybrid MOV and RFI filtering components.
4. UL 1449, 3rd edition and 10 year product warranty.
5. The suppressor shall be of the type MA15 by Atlantic Scientific.

E. Surge Suppressors for Analog Signal Connections: Surge suppressors for analog signal circuits shall:

1. Have four lead devices with a threaded mounting/grounding stud.
2. Have a circuit consisting of a 3-electrode gas tube and silicone avalanche devices to clamp each line to ground. High-energy gas tube and silicone avalanche devices shall be separated by series impedance.
3. Be epoxy encapsulated with a nonflammable phenolic enclosure. Epoxy encapsulation shall be flame retardant.
4. Limit line-to-ground and line-to-line voltage to 36 volts on 24V dc circuits.
5. Meet or exceed the following performance criteria based on a test surge wave with 8-microsecond rise time and 20-microsecond exponential decay time:
   a. Recovery: Automatic
   b. Peak Source Current: 10,000 amps
   c. Pulse Lift Before Failure: 100 occurrences
   d. Minimum Voltage Clamp Rating: 36 volts
   e. Series Impedance: 24 ohms total
   f. Temperature Range: -20 degrees C to +85 degrees C
   g. Operating Voltage: Less than 36V dc
   h. Operating Current: 4 to 20 mA dc
   i. Resistance Line-to-Ground: Greater than 1 mega-ohm
6. The suppressor shall be of the type PC 642C-036 by EDCO Inc. or approved equal.

F. RF Surge Suppressors: RF surge suppressors shall:

1. Meet or exceed the following technical specifications:
   a. Surge: 50kA IEC 1000-4-5 8/20ms Waveform 500 Joules
   b. Turn on: 600 VDC +/-20%
   c. Turn on time: 2.5ns for 2kV/ns
   d. Frequency Range: 125MHz to 1GHz
   e. VSWR: ≤1.1 to 1 over frequency range
   f. Insertion Loss: ≤0.1 dB over frequency range
   g. Temperature: -40°C to +85°C Storage/Operating +50°C
   h. Unit Impedance: 50 Ohm
   i. Mounting: Flange
2. The suppressor shall be of the type IS-50NX-C2 by PolyPhaser Inc. or approved equal.

5. RTU CORROSION PROTECTION

A. All indoor and outdoor cabinets, panels and consoles shall be fitted with vapor phase corrosion inhibitor capsules capable of protecting 5-cubic feet of space for one year; Hoffman Model A-HCI5E, ZERUST Model VC-6-2 or approved equal. Capsules shall be labeled with the date of activation.

6. RTU FABRICATION

A. Cabinets and panels shall provide mounting for power supplies, control equipment, input/output subsystems, panel mounted equipment and appurtenances. Ample space shall be provided between equipment to facilitate servicing and cooling.

B. Terminal blocks shall be factory assembled on a miniature mounting channel and the channel bolted to the steel strap. Terminals shall be miniature screw type with integral fuse holder unless otherwise required. Terminal blocks shall provide access to screw terminals without disabling the fuses.

C. The terminals shall be marked vertically with a permanent, continuous marking strip from top to bottom. One side of each terminal strip shall be reserved exclusively for field incoming conductors. Common connections and jumpers required for internal wiring shall not be made on the field side of the terminal. Subject to the approval of the Owner, a vendor's pre-engineered and prefabricated wiring termination system will be acceptable.

D. Wiring shall comply with accepted standard instrumentation and electrical practices and codes. For each pair of parallel terminal blocks, the field wiring shall be between the blocks. Solder-less horseshoe (spade) connectors, with insulating sleeves, shall be used for connecting wires to terminal blocks.

E. All wiring shall be bundled and run open or enclosed in vented plastic wire way, as required. All conductors run open shall be bundled and bound at regular intervals, not exceeding 12 inches, with nylon cable ties. Care shall be taken to separate electronic signal, discrete signal, and power wiring. A copper ground bus shall be installed the full length of each panel. Interior panel wiring and field wiring shall be tagged at all terminations with machine-printed plastic sleeves. The wire number shall be the ID number listed in the input/output schedules.

RECLAIMED WATER SYSTEM RTU SPECIFICATIONS

36-39R

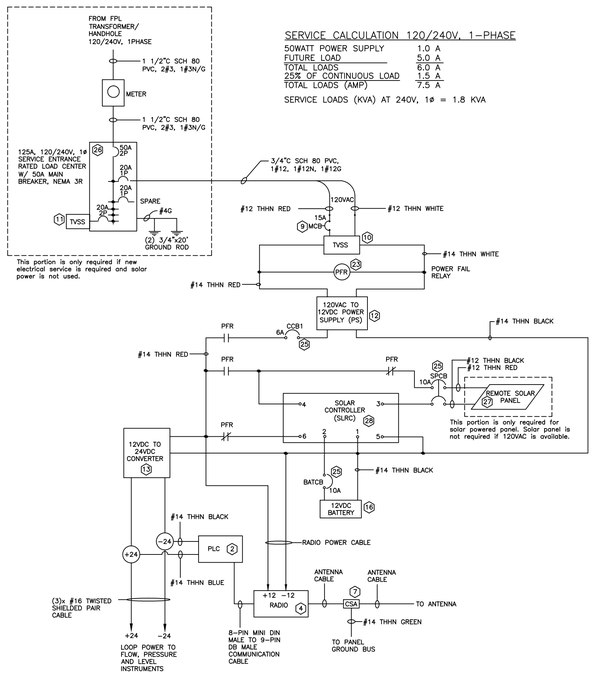

SERVICE CALCULATION 120/240V, 1-PHASE

50WATT POWER SUPPLY	1.0 A
FUTURE LOAD	5.0 A
TOTAL LOADS	6.0 A
25% OF CONTINUOUS LOAD	1.5 A
TOTAL LOADS (AMP)	7.5 A

SERVICE LOADS (KVA) AT 240V, 1ø = 1.8 KVA

NOTES:

1. SEE BILL OF MATERIALS ON PAGE NO. 31R.
2. ALL FIELD WIRING SHALL BE CONNECTED TO THE TERMINALS.

RECLAIMED WATER SYSTEM RTU CONTROL PANEL
POWER WIRING DIAGRAM

40R

PROJECT NO. 00-000

PROJECT NAME

PALM BEACH COUNTY
WATER UTILITIES DEPARTMENT
P.O. BOX 16097
WEST PALM BEACH, FL 33416
(561)493-6000

NO.	DATE	GENERAL REVISION	REVISION / REMARKS	BY
	FEB. 2015			A.G.

RECLAIMED WATER #4
STANDARD DETAILS

CONSULTANT:

IT'S THE LAW!
CALL 48 HOURS BEFORE YOU DIG
1-800-432-4770
SUNSHINE STATE ONE CALL OF FLORIDA, INC.
UTILITIES NOTIFICATION CENTER

DESIGNED BY: WUD
DRAWN BY: WUD CADD
CHECKED BY: A. GALICKI
APPROVED BY: WUD

Palm Beach County
Water Utilities Department
P.O.Box 16097
West Palm Beach, FL 33416-6097

STD DETAILS

SHEET NUMBER 0 OF 0

SEAL

Dec 09, 2016